REVISIONS			
REV	DESCRIPTION	DATE	APPROVED

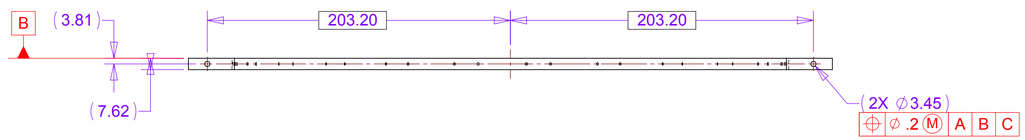

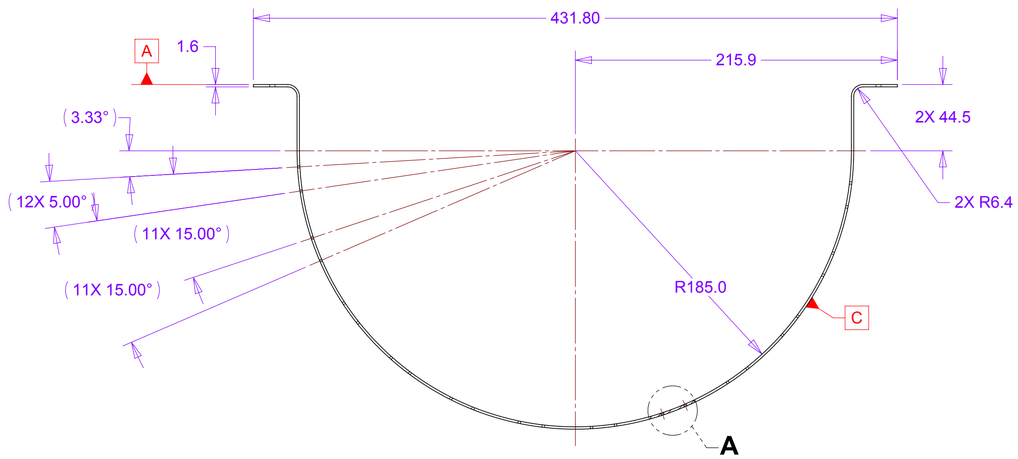

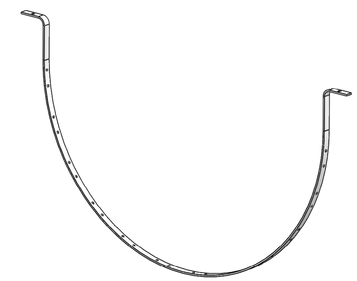

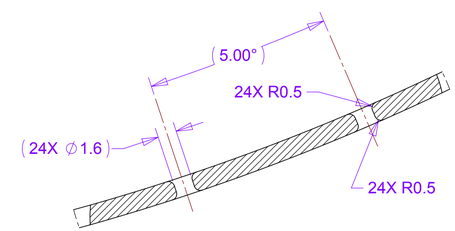

DETAIL A
SCALE 4 : 1

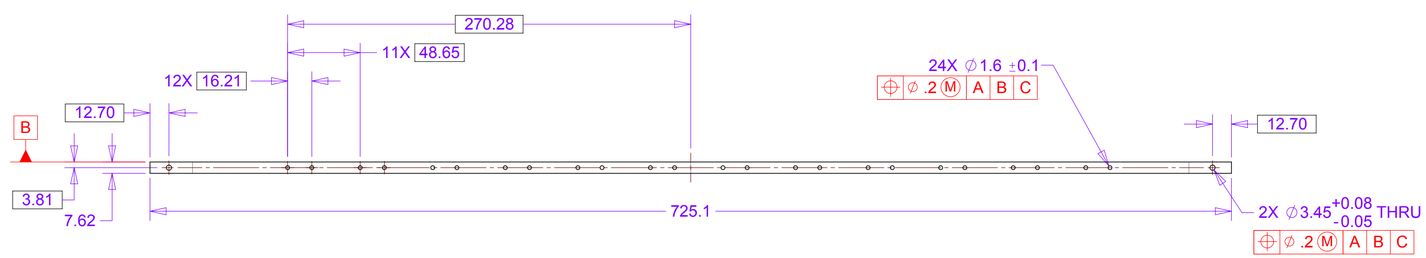

FLAT PATTERN

NOTES: UNLESS OTHER WISE SPECIFIED

1. ALL DIMENSIONS IN MILLIMETERS
2. DIMENSIONS AND TOLERANCING PER ASME Y14.5M-1994
3. SURFACE TEXTURE PER ANSI/ASME B 46.1-1985
4. REMOVE ALL BURRS AND BREAK SHARP EDGES TO A MAXIMUM OF .4
5. ALL INSIDE CORNERS TO BE .4 RADIUS MAX
6. COUNTERSINK 82 DEGREES ALL TAPPED HOLES TO MAJOR DIAMETER
7. COUNTERSINK 82 DEGREES APPROXIMATELY .08/1.5 DEEP ALL DRILLED HOLES
8. PARTS TO BE THOROUGHLY CLEANED TO REMOVE ALL OIL, GREASE, DIRT AND CHIPS
9. PART NUMBER (DRAWING NO., DASH NO., REVISION NO., SERIAL NO.) TO BE CLEARLY MARKED ON THE PACKAGING BAG OR PART ITSELF.

Material: Aluminum 6061-T6

THIS DOCUMENT CONTAINS INFORMATION THAT IS THE PROPRIETARY PROPERTY OF HYTEC, INC. REPRODUCTION, DISCLOSURE, OR RELEASE TO OTHERS, MANUALLY OR ELECTRONICALLY, IS STRICTLY PROHIBITED WITHOUT THE PRIOR WRITTEN CONSENT OF HYTEC, INC.

HYTEC RELEASED DOCUMENT

THIRD ANGLE PROJECTION

UNLESS OTHERWISE SPECIFIED:
DIMENSIONS ARE IN MILLIMETERS
-TOLERANCES-

DECIMALS
X = +/- .5
.X = +/- .1
.XX = +/- .01
.XXX = +/- .001

ANGULAR
.X = +/- 30'
.XX = +/- 15'

SURFACE FINISH = 250

FINISH

PART NO. 111-PHX-01-5228-1

CAD GENERATED DRAWING,
DO NOT MANUALLY UPDATE
DO NOT SCALE DRAWING

	SIGNATURE	DATE
Designer	Roger L. Smith	5/4/2010
Drawn	Roger L. Smith	5/4/2010
Checked	Walt Sondheim	5/27/2010
Engineer	RJ Ponchione	5/4/2010
Approved	Walt Sondheim	5/27/2010

HYTEC, INC

TITLE
PHENIX CENTRAL UPGRADE
FVTX SYSTEM
STATION 1 ASSEMBLY STAND
EXTENSION CABLE SUPPORT HOOP

DWG. NO. 111-PHX-01-5228 | SIZE D | SHEET NO. 1 of 1

SCALE 1:2 | REVISION